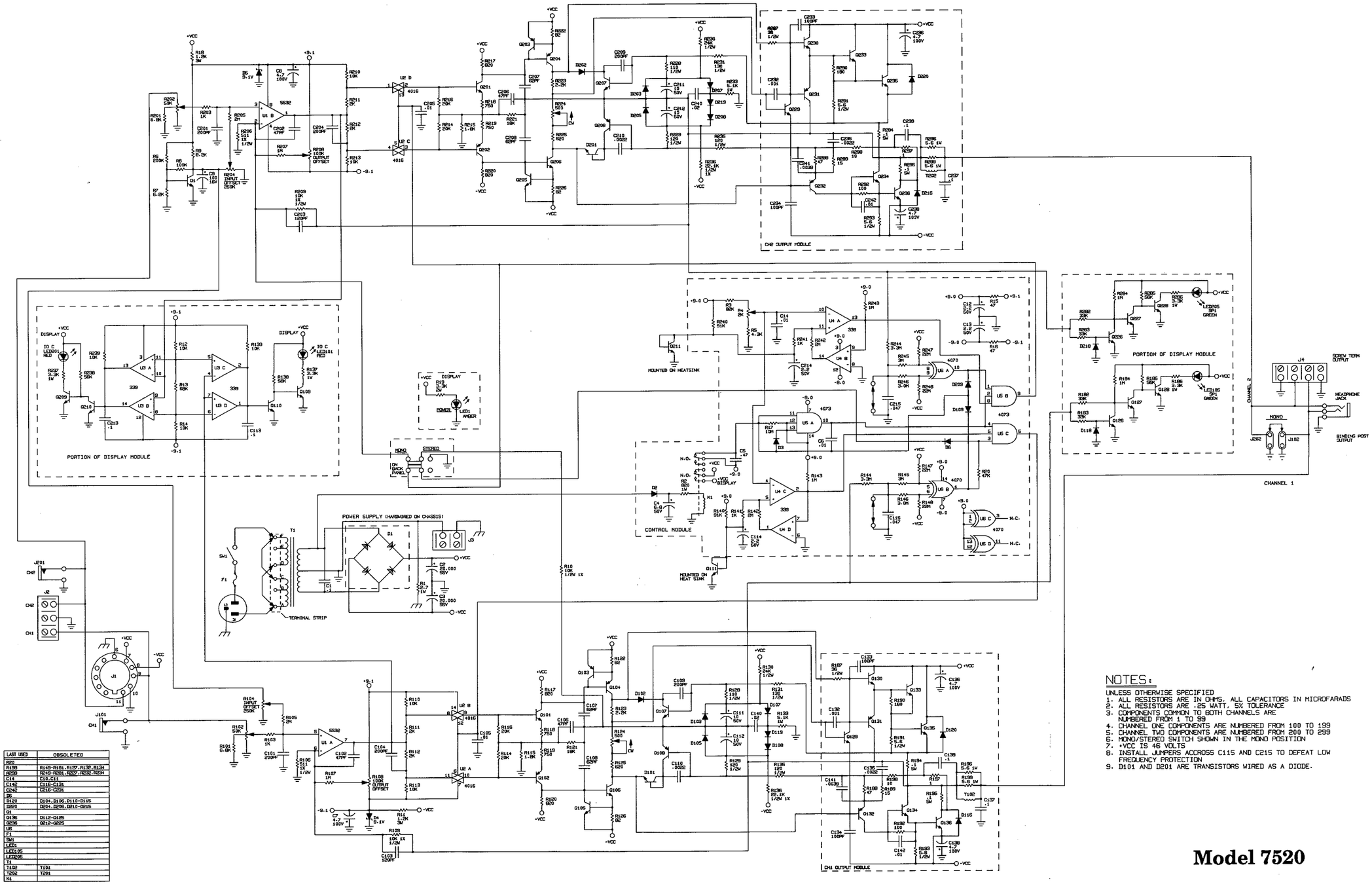

LAST USED	OBSOLETED
R20	
R193	R149-R181,R137,R132,R134
R250	R249-R251,R257,R232,R234
C14	C10,C11
C142	C116-C131
C242	C216-C231
D6	
D120	D104,D106,D110-D115
D220	D204,D206,D210-D215
Q1	
Q136	Q112-Q125
Q236	Q212-Q225
U8	
F1	
SW1	
LED1	
LED105	
LED205	
T1	
T102	T101
T202	T201
K1	

NOTES:

UNLESS OTHERWISE SPECIFIED
1. ALL RESISTORS ARE IN OHMS. ALL CAPACITORS IN MICROFARADS
2. ALL RESISTORS ARE .25 WATT, 5% TOLERANCE
3. COMPONENTS COMMON TO BOTH CHANNELS ARE NUMBERED FROM 1 TO 99
4. CHANNEL ONE COMPONENTS ARE NUMBERED FROM 100 TO 199
5. CHANNEL TWO COMPONENTS ARE NUMBERED FROM 200 TO 299
6. MONO/STEREO SWITCH SHOWN IN THE MONO POSITION
7. +VCC IS 46 VOLTS
8. INSTALL JUMPERS ACCROSS C115 AND C215 TO DEFEAT LOW FREQUENCY PROTECTION
9. D101 AND D201 ARE TRANSISTORS WIRED AS A DIODE.

Model 7520

Illustration 6–2 Schematic J0264–2 Rev. A