Service Manual

XS10

10 " 2-Way Speaker System

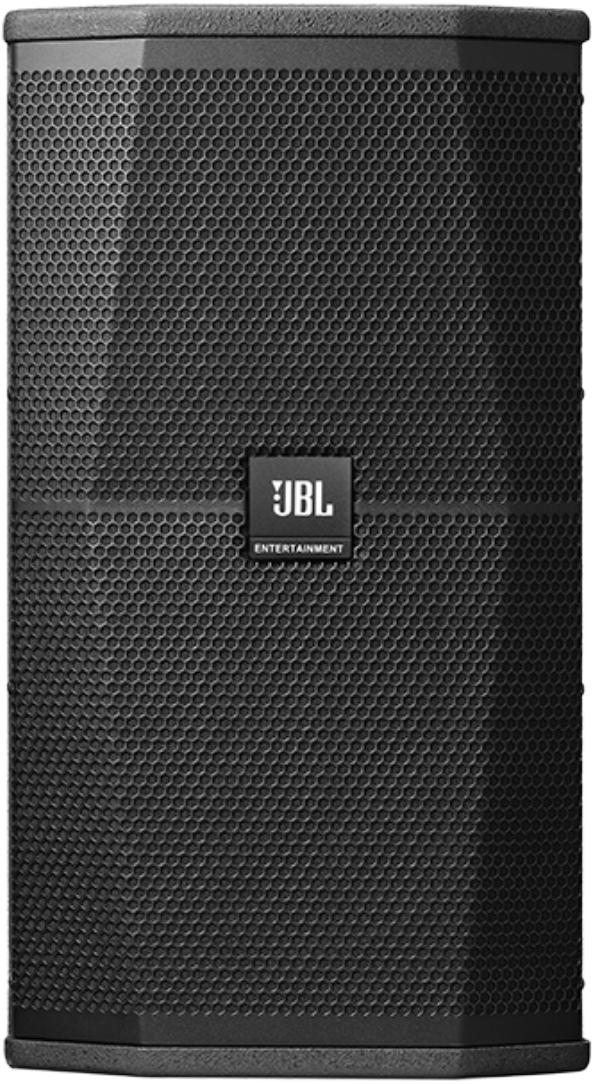

Table of Contents

Datasheets and Specifications

Exploded View Diagrams

Network Assembly Diagram

Bill of Materials

XS10

10 Inch 2-Way Speaker System

Professional Series

Key Features:

- JBL 2414H-C 1” polymer diaphragm compression driver for crystal clear vocal reproduction
- JBL designed low frequency transducer brings higher power handling and stronger bass energy
- A precision-engineered passive network critically eliminates band overlap and reveals each note detail
- 70° × 100° (H × V) horn for balanced coverage
- Rugged enclosure made from premium quality MDF
- Multiple high-strength suspension hardware for suspension installation
- Speaker pole receptacle for using with a tri-pod or subwoofer system
- High-strength edgy front grille protects the internal components from foreign objects or drink splash
- JBL Logo powered by PSL technology

Specifications:

System:	
System Type:	10”, 2-way, bass-reflex
Frequency Range (-10 dB)[1]:	52 Hz – 20 kHz
Frequency Response (±3dB)[1]:	85 Hz – 18 kHz
System Sensitivity (1w@1m)[1]:	95 dB
Nominal Impedance:	8 Ω
Maximum SPL[2]:	120 dB (126 dB peak)
Power Rating[3]:	300 W / 600 W / 1200 W (continuous / program / peak)
Coverage Pattern:	70° × 100° (H × V)
Transducer:	
HF Driver:	1 × JBL 2414H-C
LF Driver:	1 × 10” woofer
Physical:	
Enclosure:	Trapezoid, 15 mm, MDF
Suspension Attachment:	13 points, M10 threaded hardware; 35mm OmniMount pole mount socket
Finish:	Textured paint, black
Grille:	Powder coated, 1.2 mm perforated steel
Input Connector:	1 × Neutrik Speakon® NL4MP
Dimensions (H × W × D):	537 mm × 297 mm × 345 mm (21.1 in × 11.7 in × 13.6 in)
Net Weight:	16.3 kg (35.9 lbs)

1 Full space (4π) conditions
2 Calculated maximum SPL based on rated power handling.
3 IEC standard, pink noise with 6 dB crest factor for 2 hours

Applications:

- For entertainment businesses, e.g. high-end KTV chain stores, clubs, etc.

XS10 is a vented 10-inch full-range speaker system designed by JBL Entertainment to satisfy the demand for powerful bass punch and pristine vocal at high-class KTV chain stores or clubs.

For the high notes, XS10 uses a patent JBL 2414H-C 1” polymer diaphragm compression driver not only for its crystal clear high and mid vocal but also its contribution to reliability of the entire system. For the bass part, JBL engineered a new high-efficiency transducer capable of handling high power and reproducing more low frequency energy than its peers. A precision-engineered passive network critically eliminates band overlap and does a great job bringing each sound detail into full play. Balanced coverage across the KTV room is guaranteed by a 70° × 100° (H × V) horn, whenever the speaker is positioned in landscape or portrait mode.

XS10 houses all the acoustical components in a rugged enclosure made from premium quality MDF. Layout of components and transducers is an outcome of rounds of meticulous computing and simulation in order to achieve better frequency response in a more compact cabinet. Multiple high-strength suspension hardware and one speaker pole receptacle are provided to meet different installation requirements. The edgy front grille is machined from 18-gauge steel, for protection of internal components from foreign objects and drink splash. Just like else JBL entertainment product lines, XS10 also comes with a JBL Entertainment signature – the illuminating logo powered by JBL PSL (Passive Sound Lighting) technology, which will be constantly on when the singer keeps singing to his/her mic.

JBL continually engages in research related to product improvement. Some materials, production methods and design refinements are introduced into existing products without notice as a routine expression of that philosophy. For this reason, any current JBL product may differ in some respect from its published description, but will always equal or exceed the original design specifications unless otherwise stated.

▶ XS10 10 Inch 2-Way Speaker System

Frequency Response:

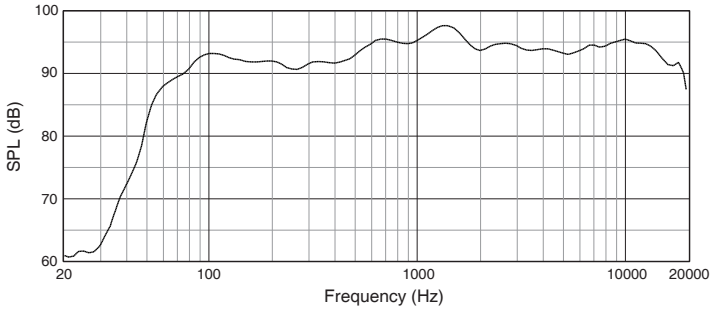

Beamwidth:

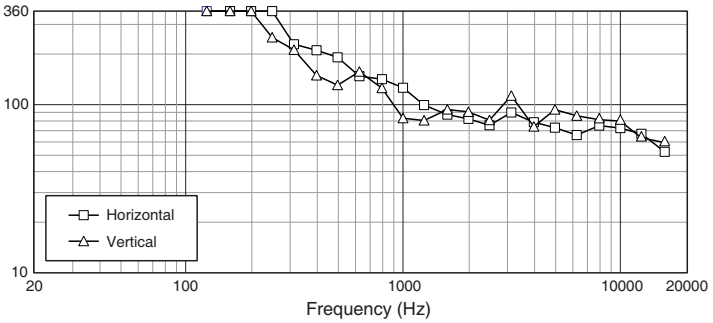

Dimensions:

Dimensions in mm (inch)

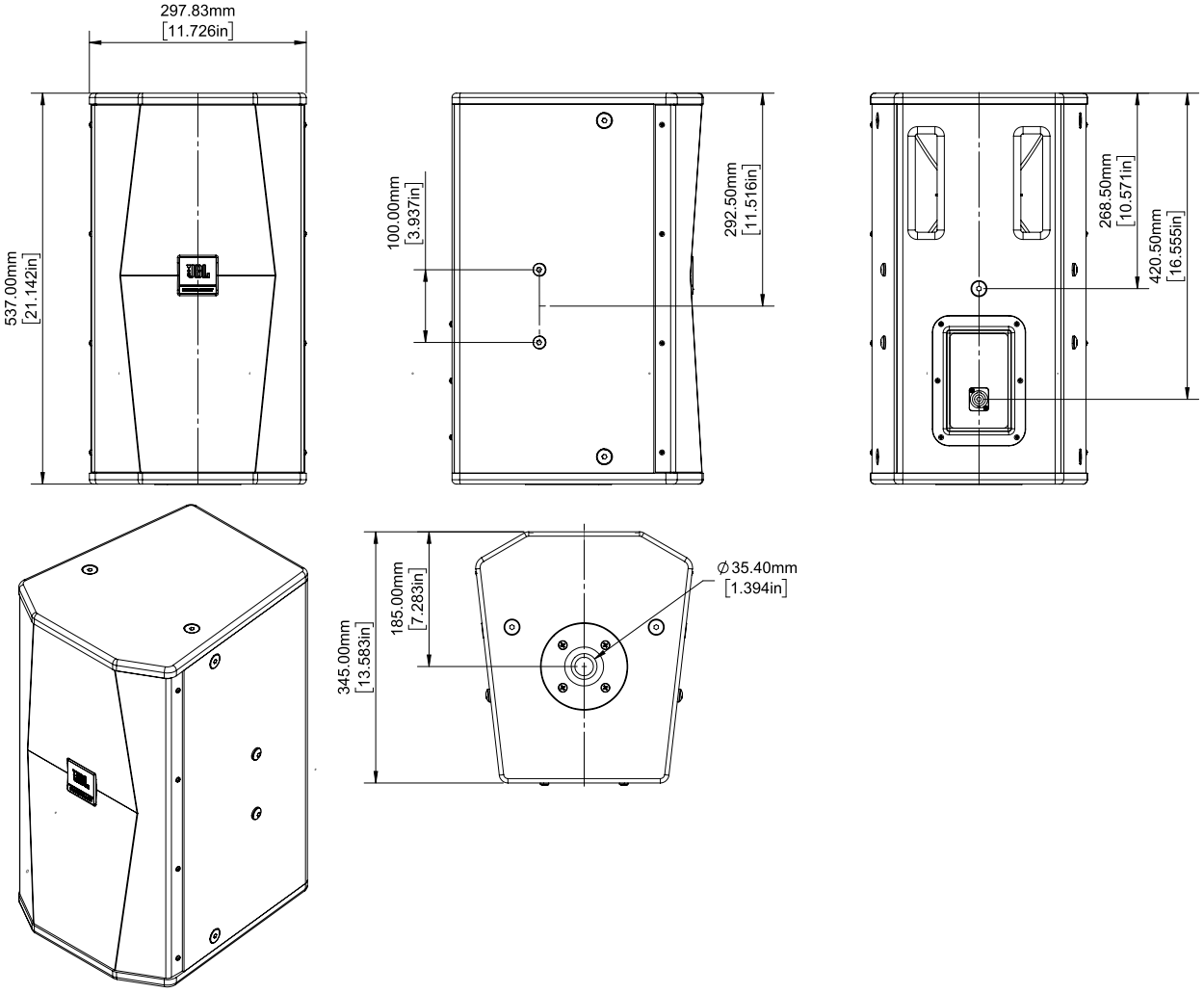

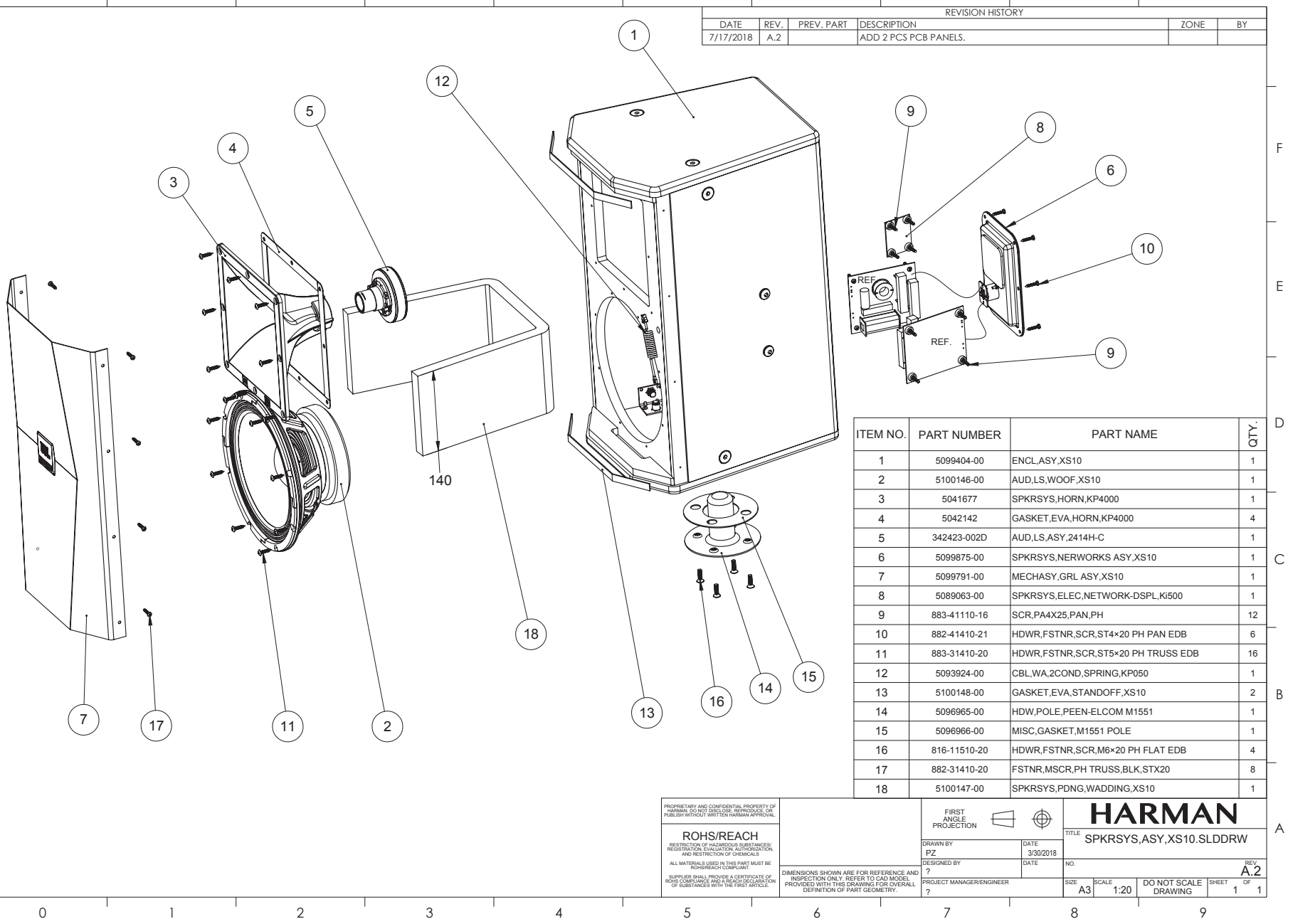

REVISION HISTORY

DATE	REV.	PREV. PART	DESCRIPTION	ZONE	BY
7/17/2018	A.2		ADD 2 PCS PCB PANELS.		

ITEM NO.	PART NUMBER	PART NAME	QTY.
1	5099404-00	ENCL,ASY,XS10	1
2	5100146-00	AUD,LS,WOOF,XS10	1
3	5041677	SPKRSYS,HORN,KP4000	1
4	5042142	GASKET,EVA,HORN,KP4000	4
5	342423-002D	AUD,LS,ASY,2414H-C	1
6	5099875-00	SPKRSYS,NERWORKS ASY,XS10	1
7	5099791-00	MECHASY,GRL ASY,XS10	1
8	5089063-00	SPKRSYS,ELEC,NETWORK-DSPL,Ki500	1
9	883-41110-16	SCR,PA4X25,PAN,PH	12
10	882-41410-21	HDWR,FSTNR,SCR,ST4×20 PH PAN EDB	6
11	883-31410-20	HDWR,FSTNR,SCR,ST5×20 PH TRUSS EDB	16
12	5093924-00	CBL,WA,2COND,SPRING,KP050	1
13	5100148-00	GASKET,EVA,STANDOFF,XS10	2
14	5096965-00	HDW,POLE,PEEN-ELCOM M1551	1
15	5096966-00	MISC,GASKET,M1551 POLE	1
16	816-11510-20	HDWR,FSTNR,SCR,M6×20 PH FLAT EDB	4
17	882-31410-20	FSTNR,MSCR,PH TRUSS,BLK,STX20	8
18	5100147-00	SPKRSYS,PDNG,WADDING,XS10	1

PROPRIETARY AND CONFIDENTIAL PROPERTY OF HARMAN. DO NOT DISCLOSE, REPRODUCE, OR PUBLISH WITHOUT WRITTEN HARMAN APPROVAL.

ROHS/REACH

RESTRICTION OF HAZARDOUS SUBSTANCES/ REGISTRATION, EVALUATION, AUTHORIZATION, AND RESTRICTION OF CHEMICALS

ALL MATERIALS USED IN THIS PART MUST BE ROHS/REACH COMPLIANT.

SUPPLIER SHALL PROVIDE A CERTIFICATE OF ROHS COMPLIANCE AND A REACH DECLARATION OF SUBSTANCES WITH THE FIRST ARTICLE.

DIMENSIONS SHOWN ARE FOR REFERENCE AND INSPECTION ONLY. REFER TO CAD MODEL PROVIDED WITH THIS DRAWING FOR OVERALL DEFINITION OF PART GEOMETRY.

FIRST ANGLE PROJECTION

HARMAN

DRAWN BY	PZ	DATE	3/30/2018
DESIGNED BY	?	DATE	
PROJECT MANAGER/ENGINEER	?		

TITLE: SPKRSYS,ASY,XS10.SLDDRW

NO. | REV. A.2

SIZE A3 | SCALE 1:20 | DO NOT SCALE DRAWING | SHEET 1 OF 1

REVISION HISTORY					
DATE	REV.	PREVIOUS PART NO.	DESCRIPTION	ZONE	BY
5/17/2018	A2		ADJUST SOME DIMENSIONS FAFTER DV		PZ
6/25/2018	A.4		ADD NETWORK SITE PANEL.		

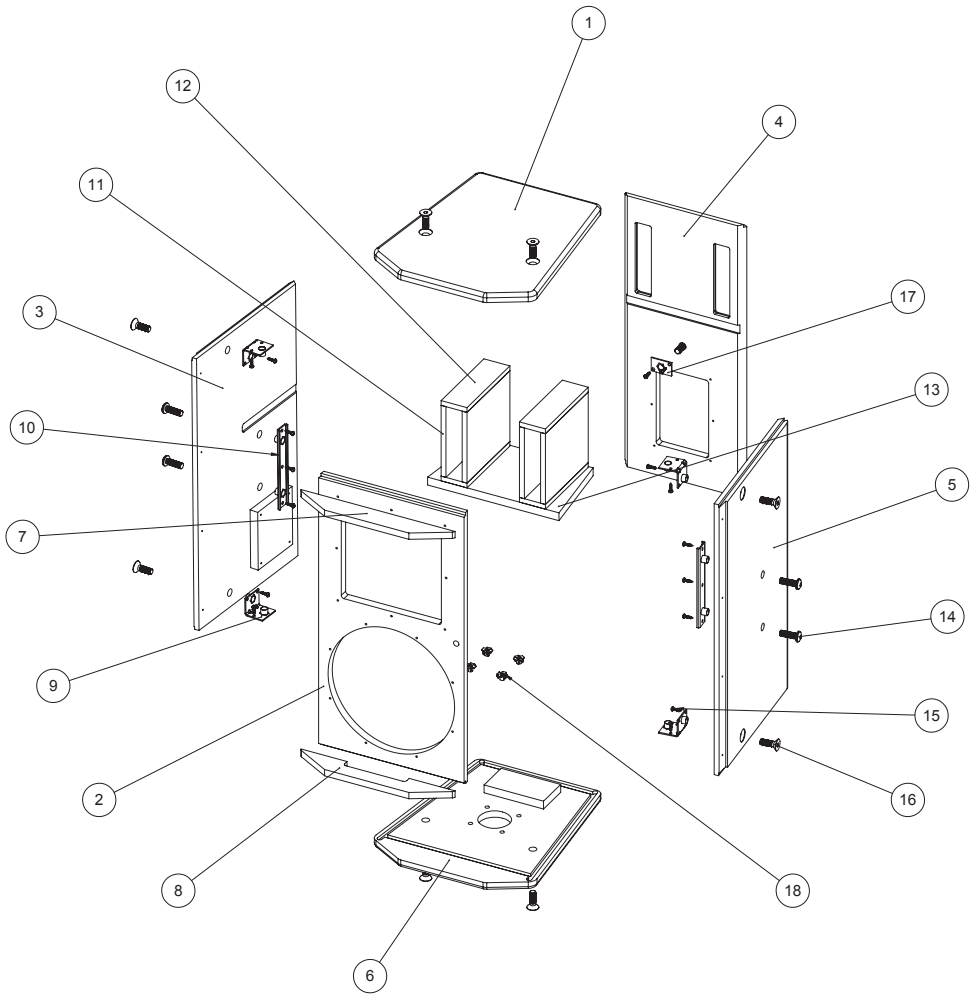

ITEM NO.	PART NUMBER	DESCRIPTION	QTY.
1	5099407-00	ENCL,PNL,TOP,XS10	1
2	5099405-00	ENCL,PNL,BAFFLE,XS10	1
3	5099408-00	ENCL,PNL,SIDE,LEFT,XS10	1
4	5099410-00	ENCL,PNL,REAR,XS10	1
5	5099409-00	ENCL,PNL,SIDE,RIGHT,XS10	1
6	5099406-00	ENCL,PNL,BOTTOM,XS10	1
7	5099413-00	ENCL,STANDOFF,TOP,XS10	1
8	5099416-00	ENCL,STANDOFF,BOT,XS10	1
9	445955-001	HDWR,BRKT,90DEGREE ASY,KP600	4
10	445228-001	100mm Bracket	2
11	5099414-00	ENCL,PNL,PORT,LONG,XS10	4
12	5099415-00	ENCL,PNL,PORT,SHORT,XS10	4
13	5099411-00	ENCL,PNL,CENTER,XS10	1
14	5061435	SCR,M10×30,TRUSS,HEX	4
15	882-41410-15	HDWR,FASTNR,SCR,ST4×15 PH,PAN, BLK ZINC	24
16	818-13710-30	HDWR,FASTNR,SCR,M10×30 HED, FLAT, EDB	9
17	445956-001	HDWR,BRKT,SINGLE POINT ASY,KP600	1
18	5041458	FSTNR,NUT,T-NUT,M6,HOOK PRONG	4

PROPRIETARY AND CONFIDENTIAL
PROPERTY OF HARMAN. DO NOT DISCLOSE, REPRODUCE, OR PUBLISH WITHOUT WRITTEN HARMAN APPROVAL.

ROHS
RESTRICTION OF HAZARDOUS SUBSTANCES
ALL MATERIALS USED IN THIS PART MUST BE ROHS COMPLIANT.
SUPPLIER SHALL PROVIDE A CERTIFICATE OF ROHS COMPLIANCE WITH THE FIRST ARTICLE.

TOLERANCES UNLESS OTHERWISE SPECIFIED:
X ±0.30 mm
X ±0.50 mm
ANGULAR: ±0°30'
ALL DIMENSIONS ARE IN MILIMETERS
ALL DIMENSIONS APPLY AFTER FINISH

DIMENSIONS SHOWN ARE FOR REFERENCE AND INSPECTION ONLY. REFER TO CAD MODEL PROVIDED WITH THIS DRAWING FOR CHANGES OF DIMENSIONS AND FEATURES.

THIRD ANGLE PROJECTION

DRAWN BY	DATE
PZ	5/17/2018
DESIGNED BY	DATE
ENGINEER	

HARMAN

TITLE: ENCL,ASY,XS10

NO. 5099404-00 REV A.4

SIZE D | SCALE 1:4 | DO NOT SCALE DRAWING | SHEET 1 OF 13

Table of Contents

Network Assembly Diagram

REVISION HISTORY					
DATE	REV.	PREVIOUS PART NO.	DESCRIPTION	ZONE	BY
3/28/2018	A.1		RELEASE FOR QUOTATION		
4/20/2018	A.2		ADJUST WIRE LENGTH AND R4=2.7		
7/16/2018	A.3		ADJUST WIRE LENGTH AND LAYOUT		
8/3/2018	A.4				

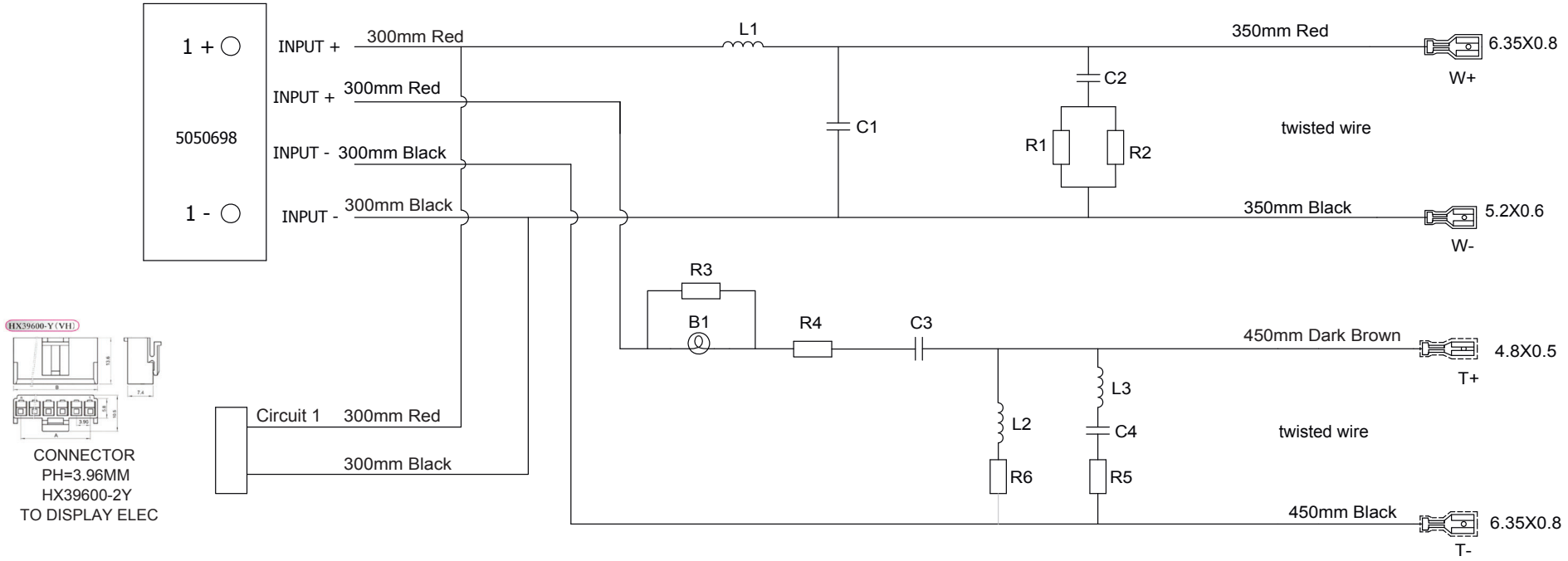

CONNECTOR
PH=3.96MM
HX39600-2Y
TO DISPLAY ELEC

B1	BULB, SYLVANIA, 569/3"LDS
L1	0.5mH, LAMINATED STEEL CORE, ±5%, 1.4mm(PEW-H 180°C). DCR<0.3Ω, NYLON FRAME SIZE:23X23X58mm
L2	0.3mH AIRE CORE, ±5%, 0.7mm, DCR<0.6Ω.
L3	0.2mH, ±5%, 0.4mm, DCR<0.6Ω, FERRITE CORE SIZE: 10x25
C1	15uF 250V,MKP,METALIZED POLYESTER FILM, DF<0.2%, AXIAL, ±5%,
C2	10uF, 250V,MKP, METALIZED POLYESTER FILM, DF<0.2%, AXIAL, ±5%,
C3	2.2uF 250V,METALIZED POLYESTER FILM, DF<1.0%, AXIAL, ±5%
C4	2.0uF 100V,N.P. ELECTROLYTIC, RADIAL, DF<5%, ±5%, 105°C,
R1&R2	6.0 OHMS, 30W, ±5%, WIREWOUND CERAMIC,SQZ,
R3	20.0 OHMS, 20W, ±5%, WIREWOUND CERAMIC, SQP,
R4	2.7 OHMS, 10W, ±5%, WIREWOUND CERAMIC, SQP,
R5	15.0 OHMS, 5W, ±5%, WIREWOUND CERAMIC, SQP,
R6	0.5 OHMS, 5W, ±5%, WIREWOUND CERAMIC, SQP,
WIRES	18AWG, UL-1015
PCB MATERIAL:	CEM-1
COPPER:	1 oZ
THICK:	1.6mm
PCB SIZE:	150X120MM
TERMINAL:	PVC SLEEVE

3. ALL COMPONENTS NEED TO BE FIXED WITH ADHESIVE.
2. APPLY RTV SILICONE BETWEEN B1&B2 BOTH ENDS ONLY.
1. ALL COMPONENTS TO BE TESTED @ 1 KHz.

PROPRIETARY AND CONFIDENTIAL
PROPERTY OF HARMAN. DO NOT DISCLOSE, REPRODUCE, OR PUBLISH WITHOUT WRITTEN HARMAN APPROVAL.

ROHS
RESTRICTION OF HAZARDOUS SUBSTANCES
ALL MATERIALS USED IN THIS PART MUST BE ROHS COMPLIANT.
SUPPLIER SHALL PROVIDE A CERTIFICATE OF ROHS COMPLIANCE WITH THE FIRST ARTICLE.

DIMENSIONS SHOWN ARE FOR REFERENCE AND INSPECTION ONLY. REFER TO CAD MODEL PROVIDED WITH THIS DRAWING FOR OVERALL DEFINITION OF PART GEOMETRY.

THIRD ANGLE PROJECTION

DRAWN BY	PZ	DATE	09/08/2017
DESIGNED BY	?	DATE	
ENGINEER	?		

HARMAN

TITLE: NETWORK ASY,XS10

NO. 5099871-00 REV A.4

SIZE B | SCALE 2:1 | DO NOT SCALE DRAWING | SHEET 1 OF 2

Refer to the corresponding Service Bill of Materials (SBOM) to order parts stocked by Harman.